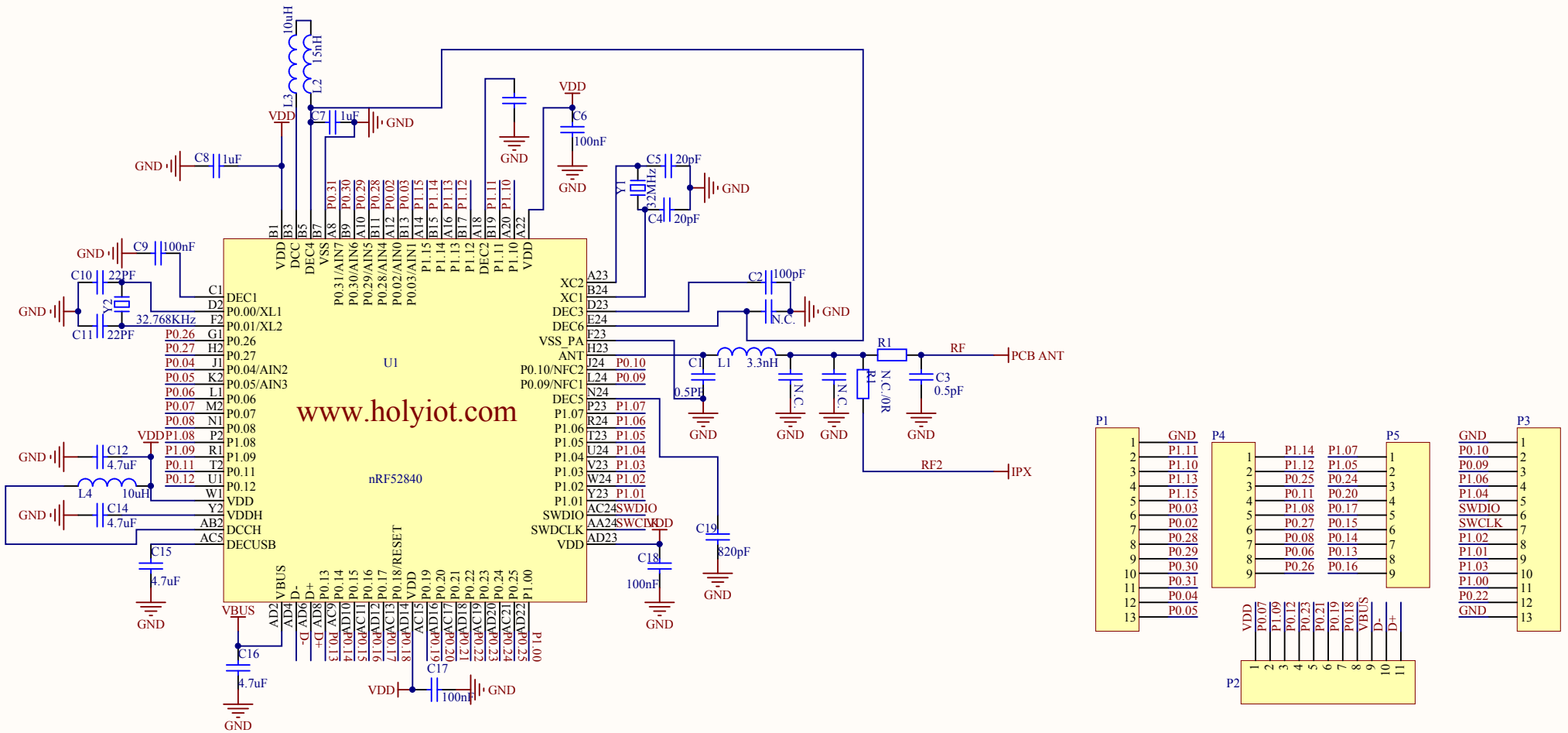

Title
HOLYIOT-18039-NRF52840-VER1.0

Size	Number	Revision
A4	www.holyiot.com	

Date: 2019-01-17 Sheet of
File: C:\Users\..\HOLYIOT-18039-NRF52840.SCHDOC Drawn By: